061807-510963-(03)

Bravo se™
Disc Publisher

Automated Optical Disc Duplication & Printing System

USER'S MANUAL
For Macintosh and PC

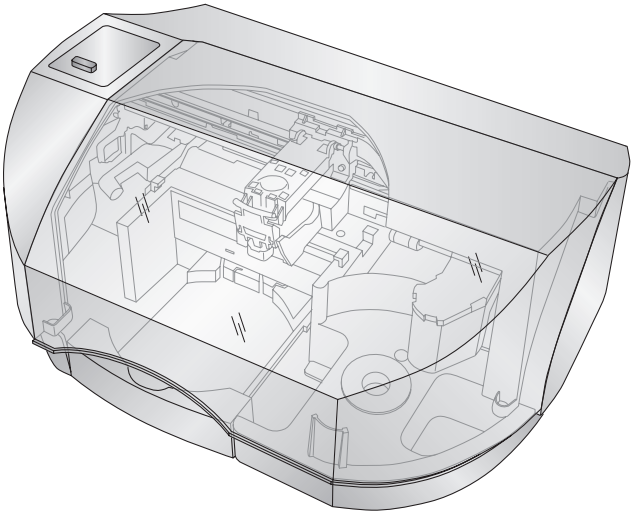

PRIMERA

© 2007 All rights reserved

Notices: The information in this document is subject to change without notice. NO WARRANTY OF ANY KIND IS MADE WITH REGARD TO THIS MATERIAL, INCLUDING, BUT NOT LIMITED TO, THE IMPLIED WARRANTIES OF MERCHANTABILITY AND FITNESS FOR A PARTICULAR PURPOSE. No liability is assumed for errors contained herein or for incidental or consequential damages in connection with the furnishing, performance, or use of this material. This document contains proprietary information that is protected by copyright. All rights are reserved. No part of this document may be photocopied, reproduced, or translated into another language without prior written consent.

Trademark Acknowledgments: Windows is a registered trademark of Microsoft Corporation. All other trademarks are the property of their respective owners.

Printing History
Edition 1.3, #061807, Copyright 2007, All rights reserved.

FCC Compliance Statement: This device complies with part 15 of the FCC rules. Operation is subject to the following two conditions: (1) this device may not cause harmful interference, and (2) this device must accept any interference received, including interference that may cause undesired operation.

For Users in the United States: This product is intended to be supplied by a UL listed Direct Plug-In Power Supply marked "Class 2"or a UL listed ITE Power Supply marked "LPS" with output rated 12VDC, 4.5A or higher. This equipment has been tested and found to comply with the limits for a Class A digital device, pursuant to Part 15 of the FCC Rules. In a domestic environment this product may cause radio interference, in which case the user may be required to take adequate measures. This equipment generates, uses, and can radiate radio frequency energy and, if not installed and used in accordance with the instructions, may cause harmful interference to radio communications. However, there is no guarantee that interference will not occur in a particular installation. If this equipment does cause harmful interference to radio or television reception, which can be determined by turning the equipment off and on, the user is encouraged to try to correct the interference by one or more of the following measures:

- Re-orient or relocate the receiving antenna.
- Increase the separation between the equipment and receiver.
- Connect the equipment into an outlet on a circuit different from that to which the receiver is connected.
- Consult the dealer or an experienced radio/TV technician for help.

Use of shielded cables is required to comply with the Class A limits of Part 15 of the FCC Rules. You are cautioned that any changes or modifications not expressly approved in this manual could void your authority to operate and/or obtain warranty service for this equipment.

For Users in Canada: This digital apparatus does not exceed the Class A limits for radio noise for digital apparatus set out on the Radio Interference Regulations of the Canadian Department of Communications. Le present appareil numerique n'emet pas de bruits radioelectriques depassant les limites applicables aux appareils numeriques de la class A prescrites dans le Reglement sur le brouillage radioelectrique edicte par le ministere des Communications du Canada.

CAUTION!
TO PREVENT FIRE OR SHOCK HAZARD, DO NOT EXPOSE THE UNIT TO RAIN OR MOISTURE. TO REDUCE THE RISK OF ELECTRIC SHOCK, DO NOT REMOVE EXTERIOR PANELS. NO USER-SERVICEABLE PARTS INSIDE. REFER SERVICING TO QUALIFIED SERVICE PERSONNEL. OPERATE THE UNIT WITH ONLY THE PROPER ELECTRICAL SPECIFICATIONS AS LABELED ON THE PRINTER AND AC ADAPTER.

CAUTION!
THIS PRODUCT CONTAINS A LASER DIODE OF A HIGHER CLASS THAN 1. TO ENSURE CONTINUED SAFETY, DO NOT REMOVE ANY COVERS OR ATTEMPT TO GAIN ACCESS TO THE INSIDE OF THIS PRODUCT. REFER ALL SERVICING TO QUALIFIED PERSONNEL. THE FOLLOWING LABEL APPEARS INSIDE YOUR UNIT:
CLASS 1 LASER PRODUCT LASER KLASSE 1

CAUTION!
USE OF CONTROLS OR ADJUSTMENTS OR PERFORMANCE OF PROCEDURES OTHER THAN THOSE SPECIFIED HEREIN MAY RESULT IN HAZARDOUS RADIATION.

Table of Contents

Section 1: Getting Started **1**
A. Choosing a Good Location 1
B. Unpacking and Inspection 2
C. Identifying the Parts 3
D. PC System Requirements 5
E. Mac System Requirements 5
F. Overview of Operation 6

Section 2: Hardware and Software Set-Up **8**
A. Installing the PC Software 8
B. Installing the Mac Software 8
C. Hardware Setup 9
Step 1: Applying Power 9
Step 2: Loading Media 9
Step 3: Connecting the USB Cable 11
Step 4: Installing the Ink Cartridge 13
Step 5: Aligning the Cartridge 13

Section 3: Creating Discs on a PC **14**
A. Tutorial: Copy a CD or DVD 14
B. Using PTPublisher 19
C. Creating a Print Label Using SureThing 21
D. Advanced Printer Driver Functions 22
E. Using Other Graphics Programs 28

Section 4: Creating Discs on a Mac **29**
A. Tutorial: Copy a CD or DVD 29
B. Using Discribe 5.3 32
C. Printed Label Format Requirements 36
D. Advanced Printer Driver Functions 37

Section 5: Maintenance and Troubleshooting **44**
A. Interpreting the Publisher's Indicator Lights 44
B. Cleaning the Publisher 44
C. Performing a Robotic Self-Test 45
D. Cleaning the Ink Cartridges 45
E. Technical Support 46

Section 6: Technical Specifications **47**

Index **48**

Interactive Feature in this PDF Document

There are interactive features that will allow you to jump to different locations within the document. Each listing in the Table of Contents is interactive. Place the cursor on either the words or the page number. A small hand with a pointing finger icon appears. Click on the line with the icon and the document will jump to that page. If you want to return to the Table of Contents, move the icon to the top of the page and click on the arrow marked TOC. Navigating through the Index is similar. Place the icon on one of the listings or page numbers, click on it, and it will move to that page. The text relating to the Index listing will appear in red. Returning to the Index can be done by clicking on the arrow marked Index.

Section 1: Getting Started

THANK YOU...

...for purchasing the Bravo Disc Publisher SE. Bravo is the perfect all-in-one solution for producing professional looking CD-R and DVD-R discs. A wide variety of disc formats are supported, including audio CDs, Video Cds, data discs and more. Operation is simple and completely automatic once a job has been started.

To begin using your Disc Publisher, please read this manual carefully. This Operator's Manual is a complete step-by-step guide to quickly and easily create discs with your new Disc Publisher.

A separate Help file is provided with your Publisher that explains the operation of the Software. On a PC this is accessible via the software's help menu and the ? icon. On a Mac this accessible in the Disc Publisher folder in the applications directory.

NOTE ON TERMS AND CONVENTIONS:

From this point forward, the following terms and conventions will apply:

The Bravo Disc Publisher SE will be abbreviated simply as the Publisher.

Optical discs, which can include many different types of discs including CD-Rs, CD-RWs, DVD+/-Rs and more are all referred to as CDs or discs. Please note that in order to copy and record DVDs, you will need to have purchased the DVD version of the Publisher.

A. CHOOSING A GOOD LOCATION

- Place the Publisher in a location with adequate air circulation to prevent internal heat build up. You will need at least 15.25" (38.73 cm) of over-head space to fully open the cover.
- Do not place the Publisher near heat sources such as radiators or air ducts, or in a place subject to direct sunlight, excessive dust, mechanical vibration or shock.

B. UNPACKING AND INSPECTION

While unpacking your Publisher, inspect the carton to ensure that no damage has occurred during shipping. Make sure that all supplied accessories are included with your unit.

The following items should be included:

- Disc Publisher
- Power Cord and Converter
- One Three-Color (CMY) Ink Cartridge
- Installation Disc
- USB 2.0 Interface Cable (Beige)
- Warranty Card
- This Operator's Manual, Quick Start Guide and Other Printed Information.

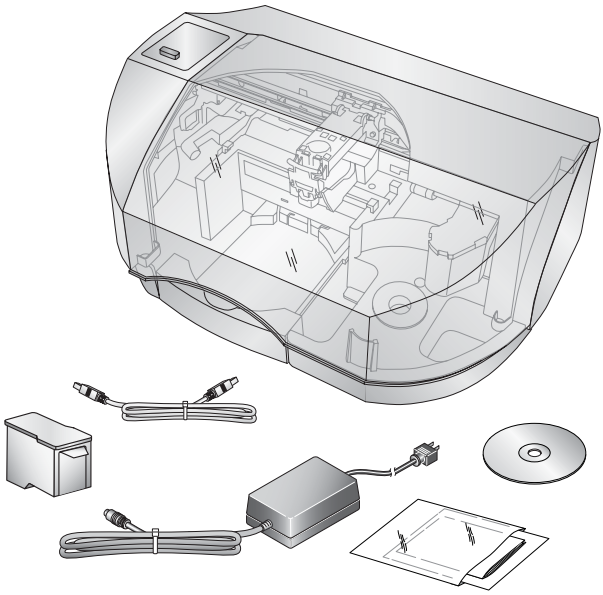

Save the carton and packing materials. They will come in handy later if you ever need to transport the Publisher and/or any of its parts and accessories.

C. IDENTIFYING THE PARTS

Front Panel and Top

This illustration shows the Publisher and its components.

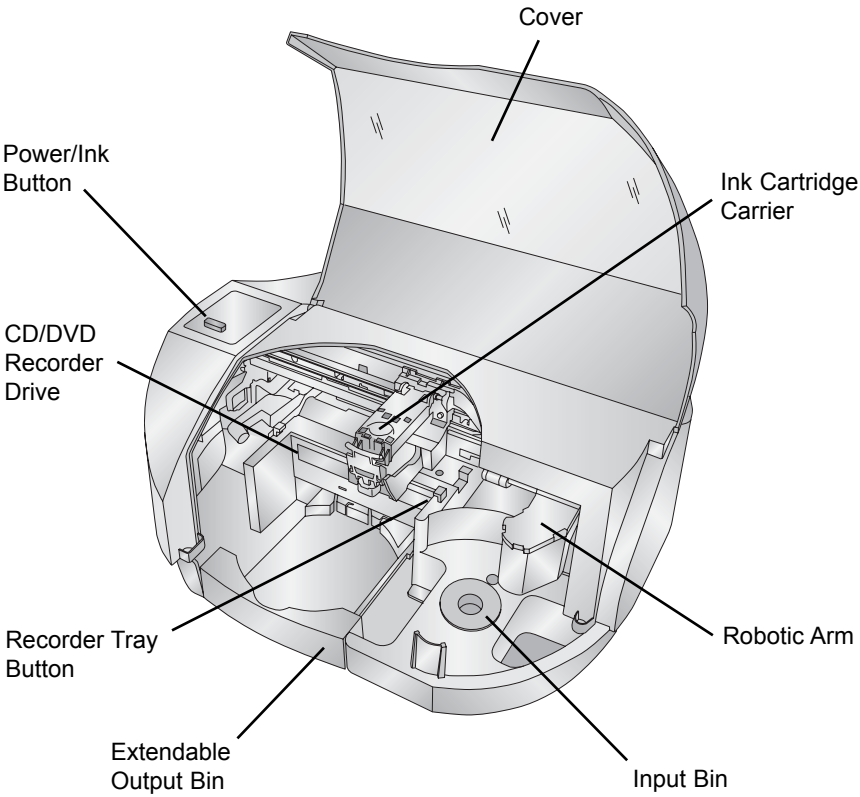

The **Robotic Disc Transporter** moves discs from the Input Bin, to a CD/DVD Recorder, to the printer, and finally to the Output Bin.

The **CD/DVD Recorder** is automatically loaded and unloaded by the Publisher's Robotic Disc Transporter.

The **Recorder Tray Button** manually opens or closes the Recorder Tray. In normal operation, the in/out movement of the Recorder Tray is controlled automatically and this button is not used.

With the cover closed, the **Power/Ink Button** turns the Publisher's power OFF if pressed and held for five seconds. Press it quickly to turn power back on. When already powered on quickly pressing the power button will open and close the printer tray.

When the front cover is opened, the **Power/Ink Button** is used to position the Cartridge Carrier for easy ink cartridge replacement.

The **Input/Output Bins** are situated under the top cover of the Publisher. The right-side bin is the Input Bin for blank media. The bin will hold up to 20 discs.

The **Output bin** is located in front of the recorder drive. You can access the output bin by opening the front cover or by pulling the bin out. The bin can be ejected at any time while the Publisher is operating. It is recommended that you close drawer for multiple disc operation. Leave the drawer open only for single disc dispensing.

The **Front Cover** is a durable plastic cover that will protect the Publisher from dust and interference.

The **Ink Cartridge Carrier** holds the color ink cartridge.

Rear Panel

This illustration shows the input ports found on the rear panel of the Publisher:

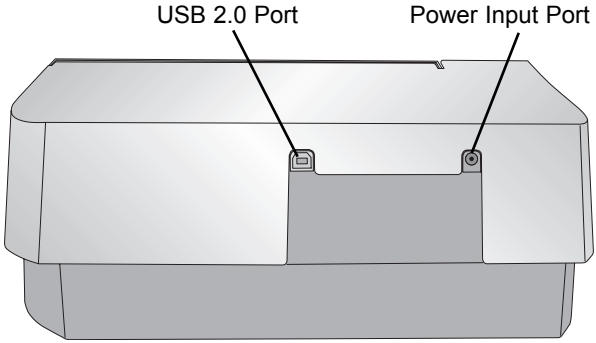

The **USB 2.0 Port** is connected to an open USB 2.0 port on your PC with the USB 2.0 cable, included with your Publisher.

The **Power Input Port** connects to the included power cable. The power supply is a switching 100V~240V power supply.

D. PC SYSTEM REQUIREMENTS

Before getting started, it is important for you to verify that your PC meets the minimum system requirements. Here's what you need in order to successfully copy discs at 8x or above with the PTPublisher software:

- 700 MHz or faster Pentium III/IV processor running Windows 2000 or XP.
- 512 MB or greater RAM
- Free hard drive space of at least 10 GB.
- Available USB 2.0 Port. (This looks the same as a USB 1.0 port. Make sure you have a USB 2.0 port for optimal performance)

If your PC does not have these minimum system requirements, system performance may not be acceptable.

E. MAC SYSTEM REQUIREMENTS

Before getting started, it is important for you to verify that your computer meets the recommended system requirements. Here's what you need in order to successfully burn and print with the Discribe software:

- G4 PowerPC 700MHz or higher running OS X version 10.2 or higher
- 256MB RAM
- Free hard drive space of at least 2 GB (up to 6 GB for DVD)
- Available USB 2.0 Port
- Do not connect the Publisher to any USB hubs or the USB port on your keyboard. It should be connected directly to an onboard USB 2.0 port.

If your computer does not have at least these minimum system requirements, system performance may not be acceptable.

F. OVERVIEW OF OPERATION

Your new Publisher is an automated, precision device intended for continuous-duty publishing of discs. The following is a description of the complete process of duplicating and printing a CD/DVD job on your Publisher:

1. Up to 20 blank discs may be loaded at one time into the Input Bin.
2. The Publisher's integrated Robotic Disc Transporter will first check your recorder drive for a disc by attempting to"pick" from the recorder. Then, the Robotic Disc Transporter will pick a disc from the Input Bin.
3. The Recorder Tray opens automatically and the Robotic Disc Transporter places a disc into the recorder. After the disc is placed in the recorder, the Robotic Disc Transporter checks the input stack to "see" if two discs were picked.
4. The Recorder Tray then automatically shuts. If a disc does not record properly (meaning that all or part of that disc is not recordable), the Robotic Disc Transporter picks it out of the CD Tray and sends it to the Output Bin.
5. The Recorder is now writing to the disc. If you were to fully record a CD with data, audio, video or music (650 MB), recording time is about 3 ½ minutes each. A full DVD records in about 7-15 minutes depending on the speed of the media to which you are recording. Most jobs don't fill the entire disc, so recording time is usually less than this. After recording, the Recorder Tray opens automatically. The Robotic Disc Transporter will lift the disc out of the Recorder Tray. The Recorder Tray will close, and the Printer Tray will open. The Robotic Disc Transporter will lower the disc into the Printer Tray, and the Printer Tray will then automatically close.
6. If publishing more than one disc, the Robotic Disc Transporter will load the Recorder Drive with a blank disc from the Input Bin to start recording the next round.

7. Once recording has started on the next round, printing will start with the recorded disc from the previous round. This simultaneous printing and recording greatly increases the throughput of your Publisher.
8. Print time varies according to which print mode has been selected (Section 3-A). In most cases, print time takes no more than 2 minutes. After printing the first disc, the Publisher's Printer Disc Tray opens automatically. The Robotic Disc Transporter moves the finished disc to the Output Bin.
9. The Robotic Disc Transporter will now load the second recorded disc into the Printer Tray for printing.
10. The process starts over and repeats until all blank discs are gone or the number you have specified via software are copied and printed.

Section 2: Hardware and Software Setup

Setup

This section will describe the step-by-step process of setting up your Publisher. This includes information on how to load the supplies (ink and disc media) necessary to start producing discs.

A. INSTALLING THE PC SOFTWARE

The Installer Disc has a menu that will guide you through the process of setting up your duplicator. Please refer to the following for more information on each step:

1. Place the Optical Disc Publisher Installer CD in your CDRom Drive. The Installer application should automatically launch in a few moments. If it does, proceed to Step 2. If it does not automatically launch, follow these steps:
   - Double-click the My Computer Icon, then double-click the icon of the appropriate CD drive containing the Software Installer disc.
   - Double-click Installer.exe
2. In the Installer Application, click the **Standard Install** button. The on screen instructions will guide you step-by-step through the installation process.

B. INSTALLING THE MAC SOFTWARE

Please note that your user account must have administrative rights to properly install a new printer. You can check with your system administrator or check with Apple support to confirm whether or not your account has administrative rights.

Install the software as follows:

a. Insert the Installation CD-ROM in your system's CD-ROM drive.

b. Double-click the CD-ROM icon.

c. Double-click on the **Disc Publisher SE Installer.mpkg** file icon. Follow the on-screen instructions.

d. The volume containing the operating system should be selected for installation. Click the **Continue** button. All components will be installed to their proper locations.

e. Once the installation has completed, click **Quit**.

You have successfully installed all the necessary software! Section C below will describe how to connect the Publisher to your Mac.

C. HARDWARE SETUP

Step 1: Applying Power

Important! Remove all packing materials from the inside of the Publisher before continuing with the following steps.

- Locate the power cord supplied with your Publisher.
- Plug the adapter into a surge protected outlet, and plug the power plug into the power port on the rear panel of the Publisher.

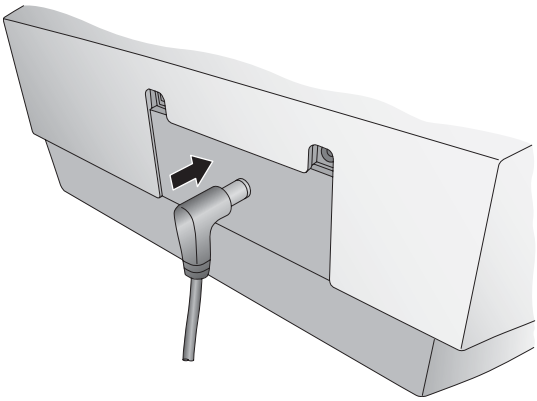

Step 2: Loading Media (Discs)

NOTE: *Your Publisher can print directly onto virtually any brand of inkjet printable-surface CD/DVD media. However, different brands of discs have different printable coatings. Because of this, you may need to adjust the printer driver settings to accommodate your specific brand of CD/DVD media. Refer to Section 3-D and 4-D for further printer driver information.*

Due to the wide variety of printable-surface CD/DVD media, you may find that certain brands of discs provide higher print quality than others. For maximum print quality, use CD/DVD media authorized by Primera.

Refer to the following steps when loading discs in to the Publisher:

- Open the front cover of the Publisher

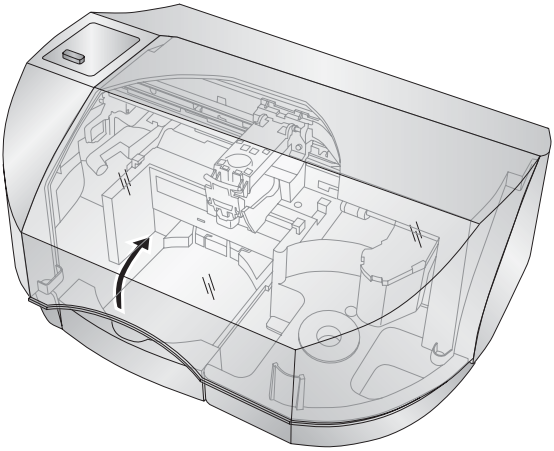

- The Publisher will automatically position the cartridge carrier and Robotic Disc Transporter to allow for easy access to the bin.

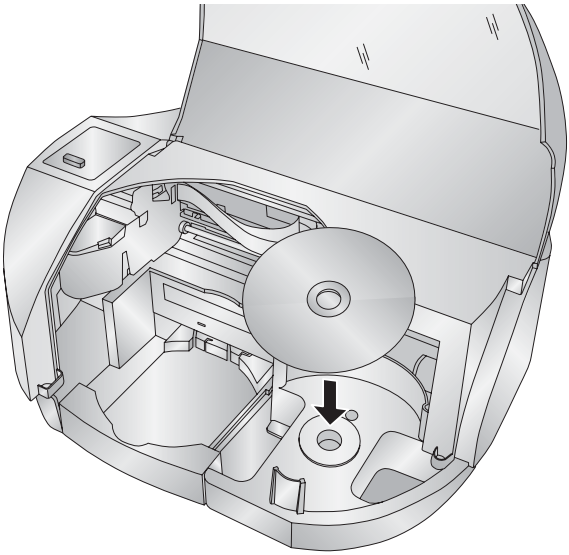

- Load the Input Bin (the bin located on the right-hand side of the Publisher) with 20 blank discs.

Step 3: Connecting the USB 2.0 Cable

Connect the Publisher to your PC or Mac with your beige USB 2.0 Cable. If you are using a PC, after a few moments, Windows will tell you it has found new hardware and is looking for software to install it.

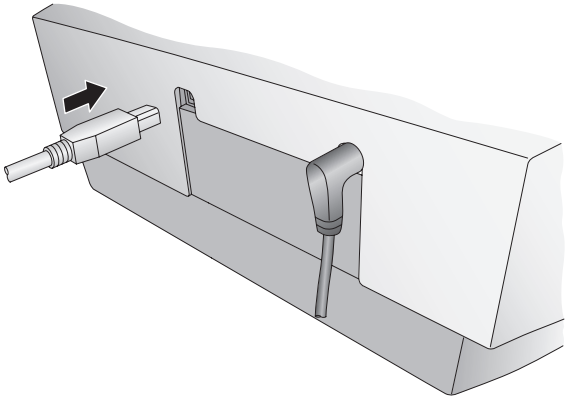

Select "**Install the software automatically**" and click **Next**.

You may see a notice like the one shown here stating that the Printer has not passed Windows Logo Testing (XP) or Windows can't verify the publisher (Vista). Click **Continue Anyway** or **Install this driver software anyway** to continue installing the printer driver for your Publisher.

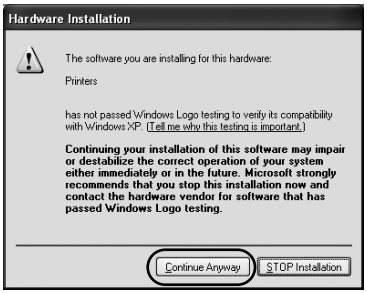

Windows XP Message

Windows Vista Message

When connecting USB to a Mac it may be necessary to Add the printer via the Printer Setup Utility.

1. Open the Printer Setup Utility located in the Applications - Utilities folder.

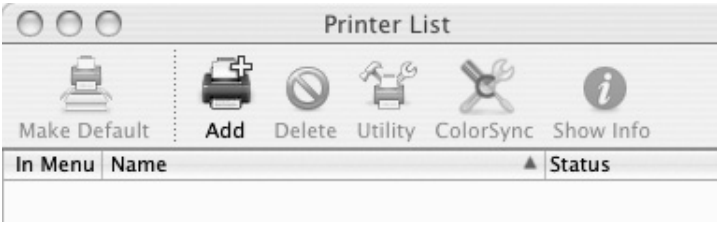

2. Click **Add**. Select the Disc Publisher XRP from the list of available printers. Click **Add** again.

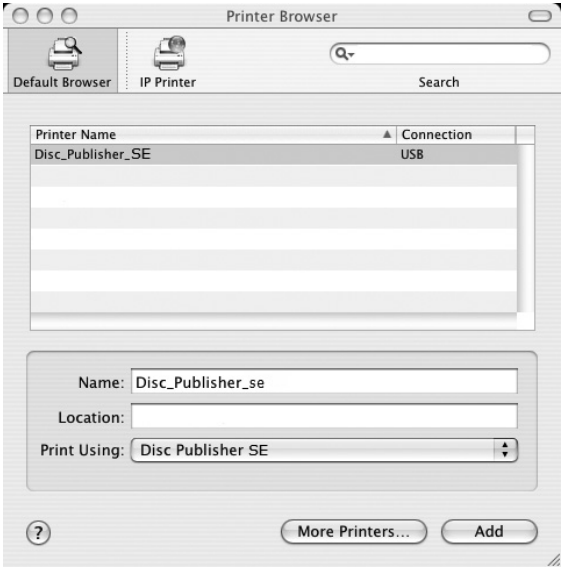

Step 4: Installing the Ink Cartridge

- With the cover open, press the Power/Ink Button to move the Ink Cartridge Carrier to the load position.
- Open the cartridge cover by pressing down on the tab.
- Remove the ink cartridge from its packaging.
- Slowly remove the tape covering the cartridge's print head.

DO NOT TOUCH THE COPPER AREA!

- Insert the ink cartridge into the carrier, copper end first and snap the cartridge cover in place.
- Close the Publisher's front cover.

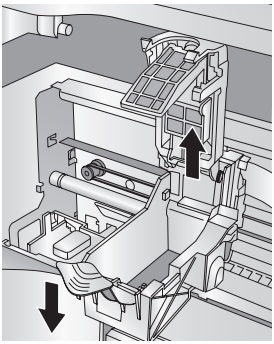

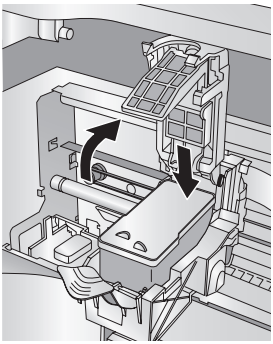

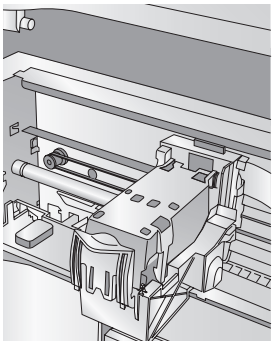

Step 5: Aligning the Cartridge

If you are using a PC the Installer will prompt you to align the cartridge.

If you are using a Mac you will be prompted to align the cartridge before you print for the first time.

Note: *An alignment print is required every time you install a new cartridge. The software will always prompt you to align the cartridges. Make sure there is an unprinted disc in the bin for this alignment.*

Section 3: Creating Discs on a PC

There are two main components to creating discs, printing and burning. SureThing CD Labeler is used to design the printing on your discs. PTPublisher controls the recording and allows you to select the image to be printed to your discs. Both applications will be described in detail in this section.

A. TUTORIAL: COPY A CD OR DVD

Copy CD or Copy DVD can be used to copy any CD or DVD master. This project reads the master disc from the Disc Publisher drive to the hard drive of your computer. The master is stored in the Global Image format (*.gi) in a temporary location on your computer. PTPublisher uses this temporary file to make all subsequent copies that are requested. The master disc is read only once to create the initial temporary file.

Recommended for: All CD or DVD types (Audio CD, Data CD, Software Install Disc, Video CD, DVD, DVD-ROM, DVD+/-DL, etc.). This is best used for single runs where you will not need to make additional copies of the master disc a later time.

1. Select Copy Project from the Starter Window or the New Project Panel. A Copy Project sub menu will be displayed. Choose Copy CD or Copy DVD. Step one of the Copy Disc wizard will be displayed.
2. You will be prompted to place the disc you would like to copy into the drive inside the Disc Publisher. The tray door will open automatically. Place the disc in the drive and click **OK**.

3. The Publisher will close the drive and read the contents of the disc. It will display disc type (CD/DVD) and show the size of the disc in Megabytes. Verify this information is correct and click the next arrow to continue.

4. Select the print label file by clicking the select a label button. When you have selected print label file, click the next arrow. There are several ways to select a print file. See the explainations below for more information.

   For any job type you choose you will be prompted to select a label file to print. You may select an existing label, create a label or choose to print nothing. Simply click the next arrow to print nothing on the disc. Otherwise follow the steps below.

4A. Select a Label

4A1 - Click the **Select a Label** button to open a browse window to choose your print file. Use the Favorites, Browse or Find Tabs on the bottom of the left pane to find the print file or click the **Look In** drop down to find the file.

4A2 - Double Click on the file to add it to your project. You may add any BMP, JPG or SureThing (.std) file. SureThing files are automatically formated correctly. BMP or JPG files should be 4.72" x 4.72" square. For best print quality the image resolution should be atleast 300 dpi.

Use the tabs on the bottom left to browse in explorer mode or search for files. Below is a description of each of the search types.

Locations. Click on the Locations tab to display favorite locations such as Desktop, My Documents or My Computer.

Browse. Click on the Browse tab to display files in tree view on the left side of the screen. Open and close folders by clicking the + or - next to each folder. Click on the folder to view the contents on the right side of the window.

Find. Click on the Find tab to search for print label files. Type in all or part of a file name to search for any picture file that matches. All JPG, BMP, GIF, PNG, TIF files matching the typed criteria will be displayed. Use the * modifier to search for specific file types such as *.jpg or *.std to search for all files ending those specific extensions.

4B. Create a Label

4B1 - Click the **Create a Label** button to open the SureThing CD Labler program. This program will allow you create a label.

Choose the 120mm DiscTemplate from the window that appears.

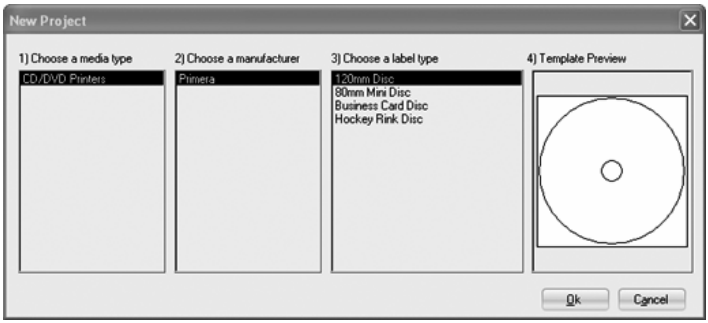

Using the buttons on the left navigation window, you may add your own background, choose a pre-made background, choose from several text effects or insert a picture. Click the down arrow on the button to view all options. Once you have designed the label go to the file menu and choose save.

4B2 - Close the SureThing program. A message will appear asking if you would like to use the SureThing file you just created in your project. Click **Yes** to use it in your project. Once you choose your label a preview will be displayed.

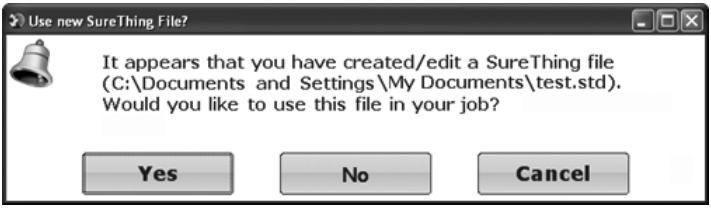

5. You can edit the print settings for this file by changing the settings that appear.

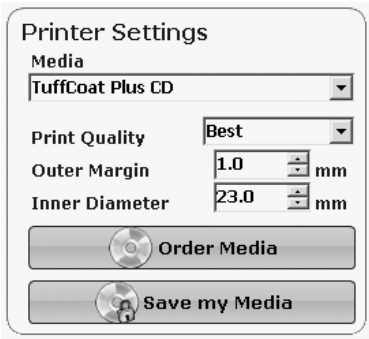

   Several preset media types that correspond with the media availabe at our webstore are available from the Media drop down box. When you select a media type from this box the Print Quality, Outer Margin and Inner Diameter are automatically adjusted to fit that media.

   If you are not using media sold by Primera you can adjust these settings by changing the quality setting or toggling the size of the printed outer margin or inner diameter. You can save your adjusted settings by clicking **Save my Media**. You will be prompted to name your custom media settings. This name and the associated settings will now be availabe to choose in the media drop down box.

6. Verify information on the summary window, choose the number of copies and click **Go**. Click the **More Options** button to set additional options such as recording speed and file system type. If you do not set these options the optimal settings will automatically be selected for you.

   Once the job starts the Publisher Status window will appear. Here you can view the status of the printer, the robot, and the drive. You can also view a log of all activity.

B. USING PTPUBLISHER

The PTPublisher program is divided into six areas. Refer to the following for a description of each area.

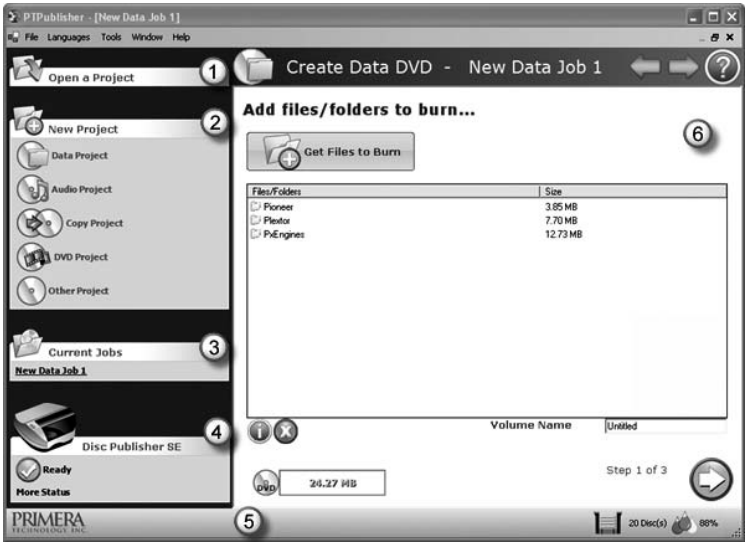

1. Open Project Panel

This panel allows you to open a previously saved project. It will also display the last few saved projects. To open or close this or any panel click on the down or up arrow on the upper right corner of the panel.

2. New Project Panel

This panel allows you to create any of the project types available for this robot. Click on the category to open specific project types. This panel is your starting point for any new project.

3. Current Projects Panel

This panel displays any project that is running or open. Once you save your project the project name will be displayed here. Click on the project name to open it.

4. Robot Status Panel

This panel displays a picture of currently connected robot. The current status is also displayed. Important errors such as low ink will be displayed here. Click "**more status**" to view status regarding the printer, recorder drive, currently running jobs and job history log.

5. Status Bar

The Status Bar shows key information such has ink levels and media supply levels for the currently selected robot.

6. Project Detail Window

This screen changes depending on the selected panel option. It can display project steps such as Adding data and Adding a print file. It can also display robot status. Finally, the support center is displayed here any time you click on the help icon. Navigate through the project steps by clicking the next arrow at the bottom right.

Support Center. Help can be accessed at any time by clicking the ? icon. This will open the support center. Depending on where you are when you click the help icon you will be given several common help documents that apply to the screen you are on.

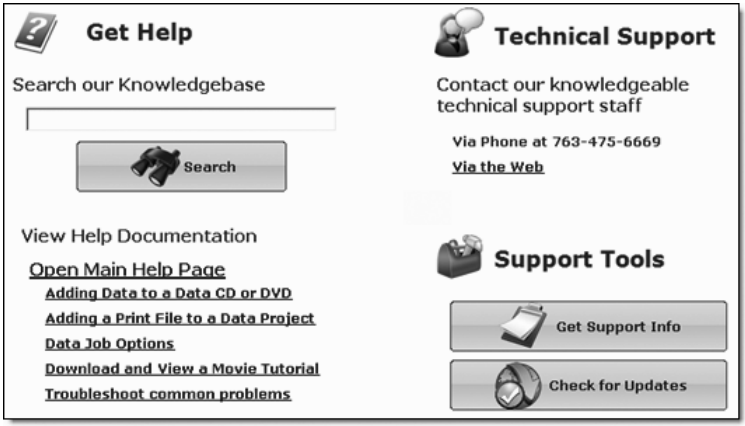

C. CREATING A PRINT LABEL USING SURETHING

The SureThing Disc Labeler software included with your Publisher is a great tool for creating professional looking discs. You can use SureThing's Smart Designs to quickly label a disc, or easily import your own design in many popular file formats. The Help section included with the software will provide complete instructions on all the features in this package. (Go to the Help Menu - Choose Contents) The following is a tutorial on creating a basic disc design:

1. Open the SureThing program. Choose the 120mm DiscTemplate from the window that appears.

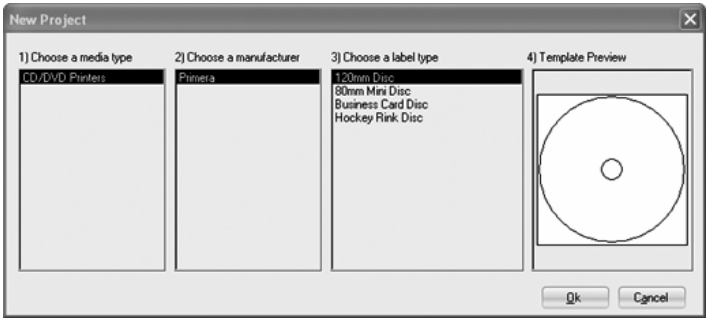

2. Open the background panel by click the arrow on the background button. Add your own background to the label by choosing Select Backgound.

3A. Browse to the location of your background image. To avoid skewed or blurry printing make sure your image is 120mm square and of sufficient resolution. We recommend 300 dpi.

3B. Instead of your own background, you can also choose from several included Surething backgrounds. To choose one of these images click the **SureThing Background** button in the Browse window that appears when you click **Select Background**. Also, you can easily toggle through the backgrounds by using the toggle bar below the label. Backgrounds are controlled by the far left toggle button.

4A. Open the text panel by clicking the arrow on the text button. Add text by selecting one of the options below. To create text that follows the curve of the disc choose Add Circular Text.

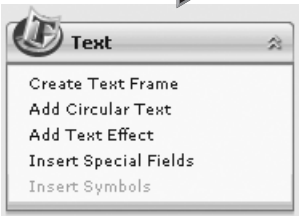

4B. You may also choose from several SureThing smart designs. These design templates automatically position your text and use certain text effects to give your label a professional look. You can easily toggle through smart designs by using the middle toggle button on the toggle bar below the label.

5. Finally, Open the picture panel by clicking the arrow on the Pictures/Clipart button. Add any logos, graphics or symbols to the label. These graphics will appear on top of the background image. You can size them appropriately by dragging the corner of the selected graphic.

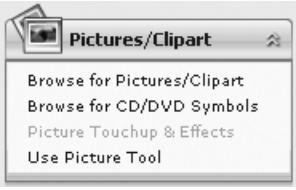

6. When you have completed design work save your label by choosing Save Project in the Actions panel.

D. ADVANCED PRINTER DRIVER FUNCTIONS

Once the Publisher software has been successfully installed, you will want to take a moment to familiarize yourself with the printer driver settings for your Publisher. These settings affect the print quality of your discs. The default settings of the Publisher printer driver will fit most printing needs. Please refer to the following steps to change or verify your printer driver options:

1. Click the **Start** button. For Windows 2000 point to **Settings** and click on **Printers**. For XP Professional click on **Printers and Faxes**. For XP Home click on **Control Panel**, then click on **Printers and Other Hardware**, then click on **Printers and Faxes**.

Click on the **Disc Publisher SE** icon with the right mouse button and select **Printing Preferences**.

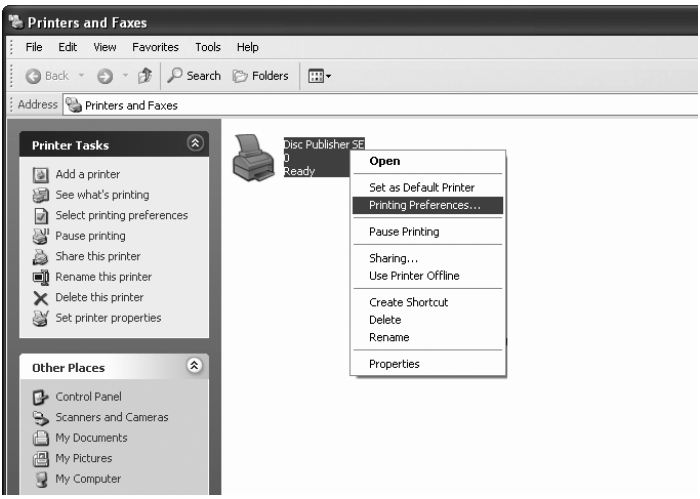

NOTE: *The PTPublisher application allows you to adjust some of these setting directly through the Add a Print file screen in that application. In PTPublisher you also have the option to Use Driver Defaults. If this option is selected the software will use all of the options set via the methods described in this section.*

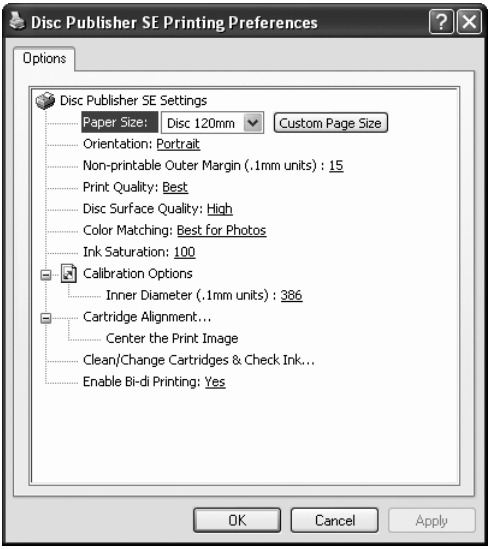

Paper Size

The paper size option will be set to CD for printing onto printable surface CDs and DVDs. The remaining options apply if you have purchased the business card adapter kit.

Non-printable Outer Margin

Adjust this value to print all the way to the outer edge of a CD. This is useful if you are printing full coverage images. The lower you set this value the farther to the outer edge of the CD you will print. Please note that with most media the printable surface does not extend all the way to the edge of the disc.

Print Quality

This setting affects the quality, speed and ink usage of the print. Color matching is also tied to this setting. Start with the default setting for fastest printing and the least amount of ink consumption. If the quality needs improvement move to the next highest setting.

Disc Surface Quality

This setting affects the quality, speed and ink usage of the print. Color matching is also tied to this setting. Start with the default setting for fastest printing and the least amount of ink consumption. If the quality needs improvement move to the next highest setting.

Color Matching

Best for Graphics mode is best used for graphical images where accurate color reproduction is not as essential. Images printed in this mode will look more vibrant because more ink is being used to produce them. However, printing images of people may produce skin tones that have a reddish tint.

Best for Photos mode is best used for photographic images where accurate color reproduction is very essential. Images printed in this mode will look lighter than those printed in Photo mode. Skin tones especially will look more natural in this mode.

NOTE: *Exact color matching of the printed discs to the screen may never be possible since there are factors that affect this out of the drivers control. The surface of the disc reacts with the ink in the cartridge to produce the color. For this reason, when printing the same image to different types of discs with different surfaces the printed output can look entirely different.*

Ink Saturation

This option controls the ink saturation of the printed image. When printing onto the printer manufacturer's TuffCoat CD media, this option can be left at its default setting of 100%. When printing onto other brands of printable CD media, you may need to adjust this control in order to optimize the ink saturation for the printable surface of your specific CD media. If discs do not seem to be drying completely it may be necessary to reduce this value.

Calibration Options

Click on the plus to reveal the following four Calibration options.

Inner Diameter

This value changes the size of the non-printed center. Larger numbers cause the non-printed center to be larger and smaller numbers make the non-printed center smaller. This number is incremented by 0.1mm so a change of 10 for inner diameter changes the diameter by 1mm.

Inner Diameter Non-Printed Diameter

230 0.905" (22.0mm) (TuffCoatTM, Default)

150 0.591" (15mm) (Physical Center)

Cartridge Alignment

The Cartridge Alignment prints a test print and then automatically scans the print to configure your printer for bidirectional printing and to align the color cartridge. It is important to perform this calibration every time you change a cartridge. If you forget to perform this calibration you will be prompted to do so before your first print from the new cartridge.

Center The Print Image

NOTE: *Your printer comes from the factory pre-calibrated to print the image in the center of the CD. You can use this adjustment if you need to fine-tune this location.*

If you ever wish to verify your factory-calibrated Vertical and Horizontal calibration settings, you can run a simple calibration procedure to assure that your images will be centered when printed on a CD. To do this, refer to the following steps:

1. Verify that a disc and a color ink cartridge are installed in the Publisher. It is important to use the same disc you normally use for your publishing because different brands of discs may vary slightly in size. Also, verify that the Publisher is powered ON and that it is connected to your computer.
2. Click on the **Center the Print Image** and then the **Properties** button. The printer will begin printing the calibration test print.
3. When the print is complete, rotate disc 180º and put the disc back in the input bin and repeat step 2 using the same disc.

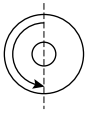

4. When the second run of the print is complete, you should have a test print that looks similar to the following:

5. Along the Vertical axis of the printed disc, find the number whose lines touch. For example, in the above illustration, Enter the number 2 into the Vertical box of the Calibration window and 0 for the Horizontal axis.
6. Select the **OK** button. Your images should now be centered when printed on a disc.

   After your selections have been made, close out of the printer setup window. You are now ready to go to an application program and print. All printer driver selections will stay the same until you change them.

Clean/Change Cartridge & Check Ink Levels

Select this button to display the current ink levels as well as options for cleaning and changing cartridge.

Change Cartridge

Select the Change Cartridge button to install a new ink cartridge or to switch back and forth between previously used cartridges.

Clean/Purge

Select Clean/Purge button to send a simple test pattern to the printer. Be sure to have a disc in the Publisher's input bin and the front cover closed. The test pattern purges ink through nozzles of your ink cartridge to clear any blockages.

Details

Select the Details button for information on the drivers, firmware, alignment and number of discs printed with your Publisher. Click **Reset Factory Default** to set all print centering and cartridge alignment settings back to factory defaults.

Enable Bi-di Printing

Set this option to Yes for faster printing that requires cartridge alignment. Set it to no for slower printing that does not require cartridge alignment.

E. USING OTHER GRAPHICS PROGRAMS

While SureThing will handle most labeling needs, other graphics programs can be used if you prefer.

When printing and burning through the PTPublisher software your Publisher will support the following additional stardard label image file formats: BMP, TIF, JPG, GIF, PNG and PRN. These formats can be exported from most any original graphics format such as Adobe Photoshop or Illustrator.

When creating images in other graphics programs we recommend creating a 4.72 x 4.72 square image that has a 300 dpi resolution.

Section 4: Creating Discs on a Mac

A. TUTORIAL: COPY A CD OR DVD

1. Double click the Discribe Icon to launch the program. You will see a splash screen followed by Discribe's Quick Start Menu.
2. Click the **Copy a CD/DVD** button.

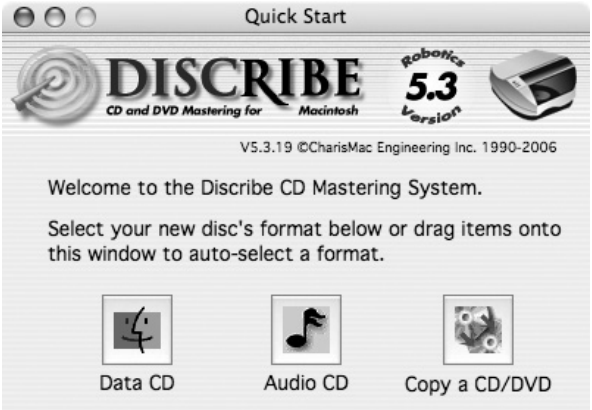

3. Place your master disc in the Publisher Drive.

Important! *You must place your master disc in the drive **AFTER** you open the Discribe software.*

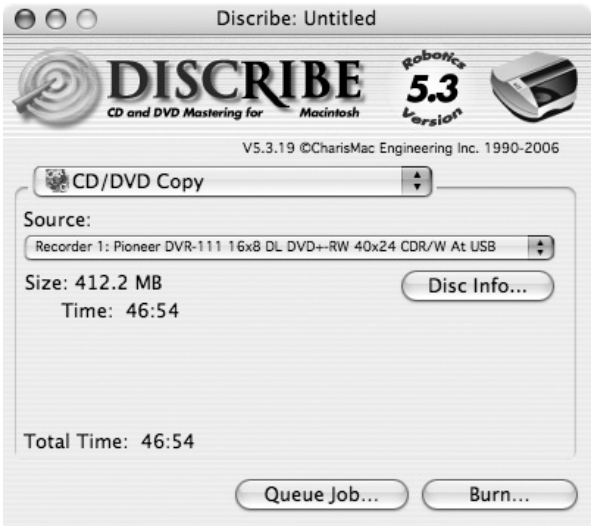

4. Select the drive that contains your master as the source drive.
5. Click the **Burn…** button
6. The **Robot Write** Options window contains selections to help you control the printing of the image, number of discs, recording options and more.
7. Click the **Print Image on Discs** button to enable printing. This will enable other buttons in this pane.
8. Press the **Choose Image** button to select an image to print. This will allow you to select any file type Apple's Preview supports including JPEG, TIFF, PICT, PDF, GIF, BMP and more. Refer to Section 4-C for label format requirements. Labels can be created in any graphics program.

9. **YOU MUST CLICK Page Setup** and set **Format For** to Disc Publisher SE!

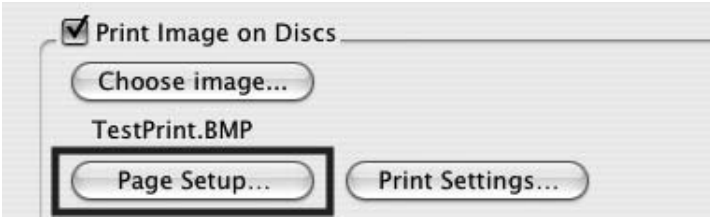

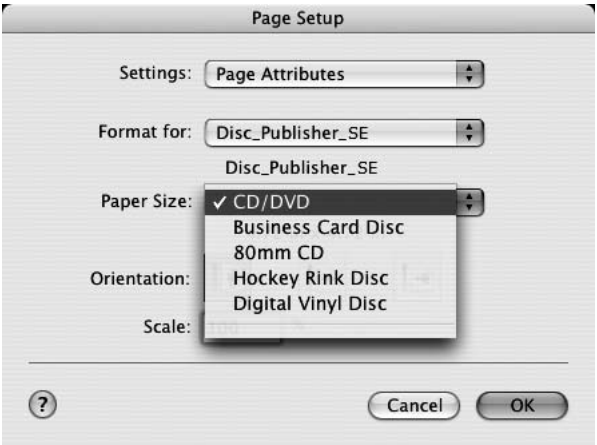

Also set the option to select a paper size to correspond with the type of disc you are using.

10. **Print Settings** will launch the Printer Driver settings when clicked. These settings are described in detail in Section 4-D of this manual.
11. Select the **Number of discs** requested for this job.
12. Once you have selected your image and chosen your preferred settings in the Robot Write Pane, click **Start** to begin recording your job.

B. USING DISCRIBE 5.3

B.1 Starting a Project

The initial Discribe starter window provides 3 project types: Audio CD, Data CD and Copy CD / DVD. Choose one. Many more projects are available once the data picker window is open. Once you are in one of the main three project types you may choose any of the other available project types by clicking the drop down box at the top of the screen and selecting one of the projects. For more information on any project type please consult the software users manual that is stored on your computer in the Applications - Disc Publisher folder.

Once you choose a new project type you will be prompted to save the original project. Click **No.**

Add data to any project by dragging the data files to this window or by clicking the **Data** button browse to specific data files or folders. Other popular project types are listed below with a short description of each.

Build a Mac HFS. Use this project type to create a CD for a Macintosh only.

ISO 9660. Use this project type to create a data CD for a Mac and a PC. Using this project type will limit file name lengths to 16 characters.

Universal Disk Format (UDF). Use this project type to create a data DVD for a Mac and a PC.

DVD Video/Audio. This project type can be used to create DVD videos from properly formatted Video_TS and Audio_TS folders on your hard drive. Note: Video_TS and Audio_TS folders must first be created by a DVD authoring program.

Disc Copy Image. Use this project to create discs from previously created images made from the Discribe software. An image is an exact snapshot of a disc that can be stored in one easily manageable file on your hard drive. Creating an image is useful for discs that you will need multiple copies of over a long period of time. This project saves time by not requiring you to read in the master before every copy project. Create images by using the Utilities - Write Physical Image command shown in the next section. Note: Only Discribe images will be accepted. Images created through other software or the Macintosh Disc Utility will not be recognized by Discribe.

B.2 Utilities and other Menus

Preferences, utilities and support are available through the menu that appears at the top of the screen when Discribe is active.

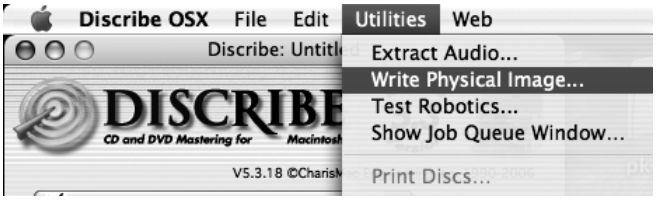

B.3 Saving Projects

It is possible to save a project so that you can easily open it again and start it. Saving projects is not possible for CD/DVD copy project. When you save a project, the data and print file locations are stored in a small file on your computer. This is different than a disc image since the actual data and print file are not stored in the project file. Once a project is saved you can queue it. Job queuing is described in the next section.

To save a project simply go to the file menu at any time and choose Save Project As.

B.4 Queue Projects

To queue a project choose the Queue Job button at the bottom of the Data Picker window instead of the Burn button. If you have not yet saved your project, you will be prompted to do so at this time.

The Robot Write Window described in section 4B.5 will be displayed. Once you choose your print file and burn settings, click **OK**. The Job Queue list window will be displayed. Here you can manage and edit the jobs that are in queue. To start the jobs click **Start Jobs**.

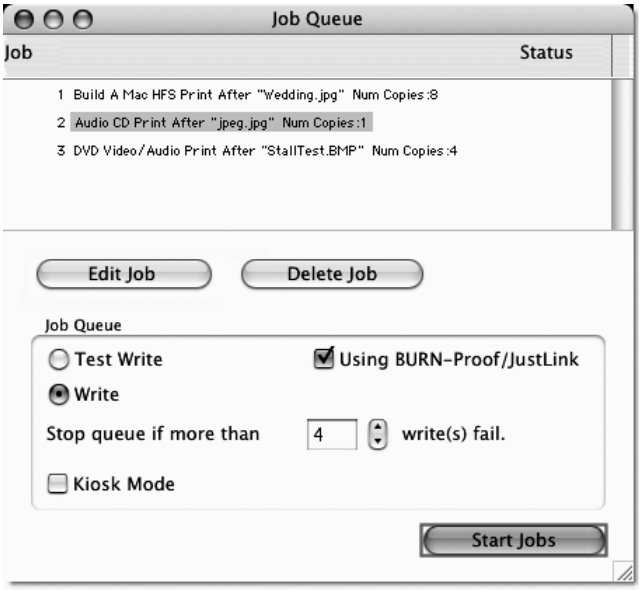

B.5 Robot Write Window

For any project Use the Robot Write Window to choose the print file, change print quality settings and choose the number of copies in a project. Print settings are explained in more detail in section 4D. Other settings on this screen can usually be left at their default values.

Important Note: *For any project you must always click* ***Page Setup****. Now set Format for to Disc Publisher SE and Paper Size to CD/DVD.*

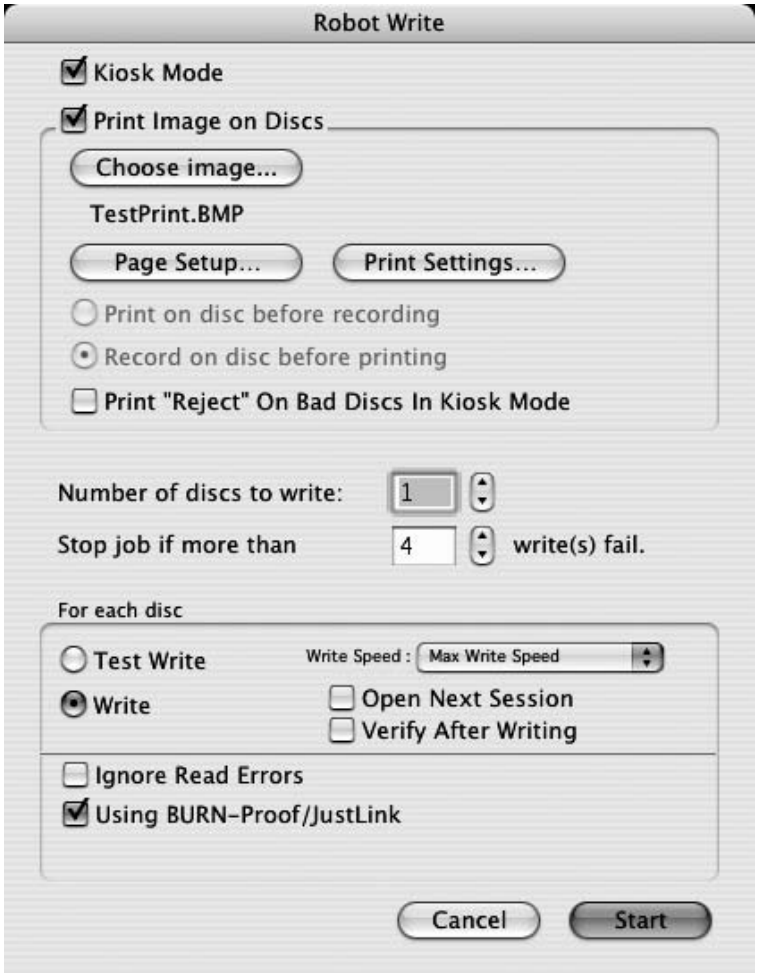

C. PRINTED LABEL FORMAT REQUIREMENTS

Your printer driver allows you to create labels in most any graphics application. The driver will center the image and automatically crop it to the shape of a CD. This means you do not necessarily need a template to create a CD in your favorite graphics program. Simply create a custom page size of 120mm (4.72 inches) square and center your image in that area and the driver will do the rest. The center sizes listed in Section D should guide you in creating your disc. Because the driver crops the image to the shape of a CD, you do not want to make your design round. You will find it is best to "over bleed" your design by filling the whole 120mm area with your image. This ensures the outer and inner diameters will print perfectly round on your disc.

Label Format Requirements:

- 4.72 x 4.72 (120mm) Square Image.
- No Circular Images

To Print and burn simultaneously through the Discribe program the image will need to be in one of the following supported file formats:

JPEGs, TIFFs, PICTs, PDFs, GIFs, BMP, JPEG 2000, MacPaint, Photoshop, PNG, QuickTime Images, SGI, TGA, and more.

In order to help you design your label, included on the installation disc are templates in eps format. These templates will help you get started designing your label.

To use the template follow these steps:

1. Open the template in Photoshop or Illustrator.
2. Create a new layer for your image or graphics. (Make sure the template layer is on top of the image layer)
3. Place your image or design your graphics on the new layer. Use the template as a guide for image and graphics placement.
4. Before you print or save your image in another format, either hide the template layer or delete the template layer. The circular shape and center cut out should not be printed. Use it only as a guide to layout your image.

D. ADVANCED PRINTER DRIVER FUNCTIONS

The following section will examine the printer driver settings that affect the print quality of your discs. While the default settings will fit most printing needs, it is a good idea to familiarize yourself with these settings to optimize your print quality. The printer driver settings are contained in two areas, Page Setup and Print Setup. You can access the driver settings as follows:

1. From Discribe, or any printing application, click the **Page Setup** and set **Format For** to Disc Publisher SE.
2. The paper sizes for the Publisher refer to the type of disc to which you will be printing. The available sizes are: CD/DVD, Business Card Disc, 80mm CD and Hockey Rink Disc.

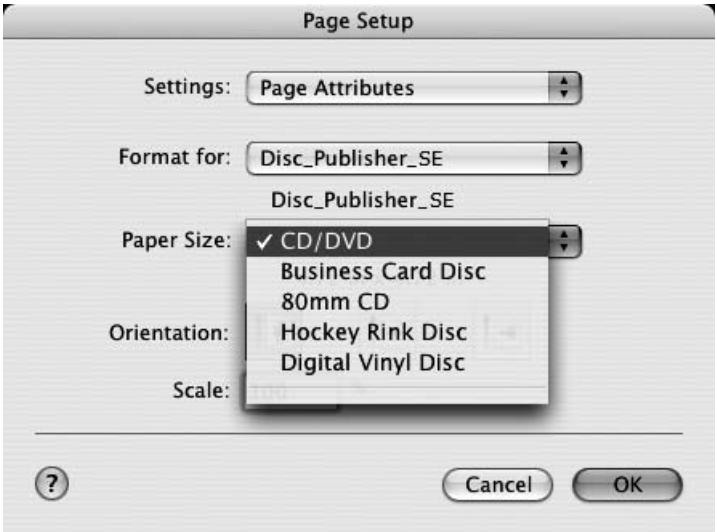

Print Settings

Click **Print Settings** to see the driver window and all of its settings. Click the **Copies and Pages** button and select **Publisher Settings** option in the drop-down menu to see the full pane and access all the printer driver settings.

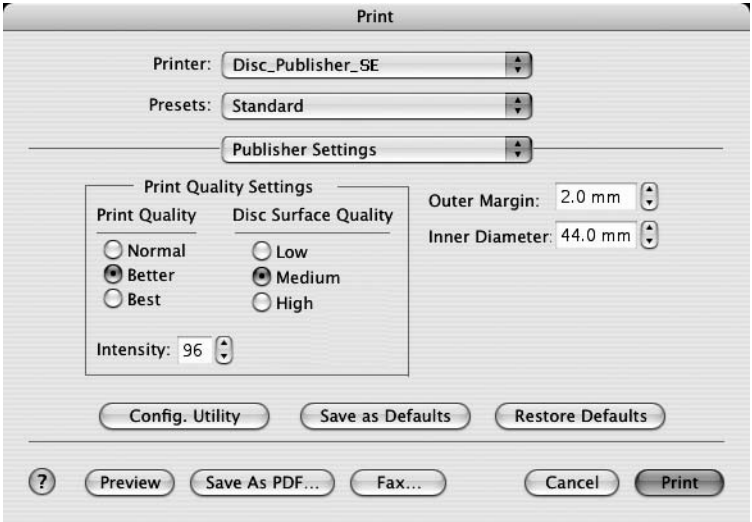

The following is a description of the printer driver settings:

- **Print Quality**
  There are three options for image quality. Keep in mind that Normal provides the fastest print at lower quality while Best delivers the best quality at a slower print speed.
- **Disc Surface Quality**
  This setting also affects the Quality of the printed image by altering the color matching profile. Start with the default setting for fastest printing and the least ink consumption. If the quality needs improvement, move to the next highest setting.
- **Color Matching**
  Graphic mode is best used for graphical images where accurate color reproduction is not as essential. Images printed in this mode will look more vibrant because more ink is being used to produce them. However, printing images of people may produce skin tones that have a reddish tint.

Photo mode is best used for photographic images where accurate color reproduction is very essential. Images printed in this mode will look lighter than those printed in Photo mode. Skin tones especially will look more natural in this mode.

NOTE: *Exact color matching of the printed discs to the screen may never be possible since there are factors that affect this out of the drivers control. The surface of the disc reacts with the ink in the cartridge to produce the color. For this reason, when printing the same image to different brands of discs with different printable surfaces the printed output can look entirely different .*

- **Intensity**
  The Intensity setting will control the amount of ink saturation on the disc. When printing onto the Primera ToughCoat discs, 96% is usually sufficient. When printing on to other brands of media, or if you would like to print darker colors, you may wish to increase the Intensity setting.
- **Inner Diameter**
  The inner diameter refers to the size of the non-printed center on your disc. The size of the center hub can vary from one type of media to the next. This allows you to set the inner diameter in millimeters allowing you to print all the way to the center hub regardless of the type of disc you are using. For the discs that Primera sells, use the following guide for Inner Diameter:
  - 23 mm for Primera's Tuff-Coat CDR
  - 24.9 mm for the Hockey Rink Disc, Business Card Disc and 80mm CD
- **Outer Margin**
  The Outer Margin refers to where the printing will cut off around the outer edge of your disc. The size of the printable surface can vary from one type of media to the next. This allows you to set the outer margin in millimeters allowing you to print all the way to the edge regardless of the type of disc you are using.
- **Save As Default**
  The Save As Default button will save the current settings as the system-wide defaults.

- **Restore Defaults**
  The Restore Defaults button will restore the driver settings to the factory defaults.
- **Config Utility**
  This button launches the Configuration Utility.

The Configuration Utility is a program that installs with your Publisher software. This utility allows you to monitor ink levels, maintain and calibrate the ink cartridge and align printing on the disc. The Configuration Utility can be launched from the Print Center in OSX by doing the following:

1. Click the **Finder**
2. Click the **Applications** Icon
3. Scroll to **Print Center** (**Printer Setup Utility** in OS X v. 10.3 or greater)
4. Highlight the **Disc Publisher SE** and click the **Configure** (**Utility** in OS X v. 10.3) Icon

You can also launch the Configuration Utility from the Disc Publisher SE printer settings in any printing application by clicking **File** then **Print** and selecting **Publisher Settings**. In **Publisher Settings** you will find a button to launch the **Configuration Utility**. When launched, the following window appears:

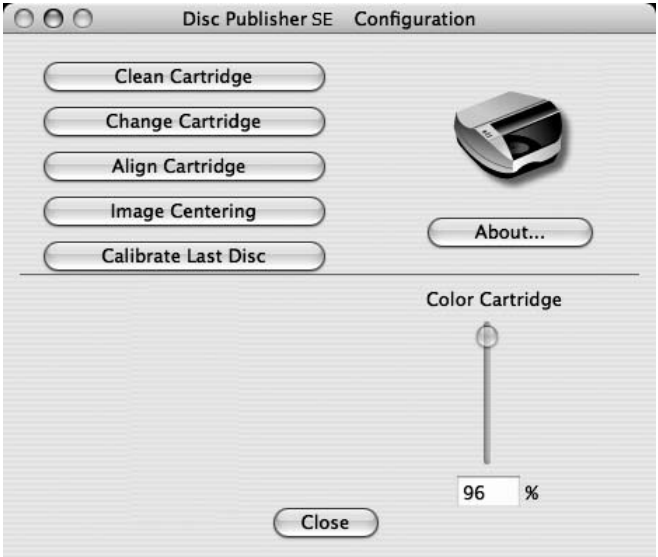

You will see the Color Ink Level is displayed. The Color Ink Level represents the lowest color in your cartridge. For instance, if your cartridge has 80% cyan 50% yellow and 65% magenta ink remaining, the level reported would be 50%. You will also see the following buttons:

Clean Cartridge

A cartridge that sits idle in the Publisher for a period of time may start to experience some drying of ink in the tiny nozzles that make up the print head. Clicking the **Clean Cartridge** button will cause the Publisher to pick a disc and place in into the printer tray. The Publisher will then print a simple pattern that will flush ink through the nozzles. The test pattern will also show you if any nozzles are clogged. In the pattern you will see some diagonal lines which should be continuous; breaks in those lines indicate a clogged nozzle. Please note that it may require more than one cleaning to fully clear all nozzles. If the nozzles are not fully clear after a few cleaning prints, it may be necessary to remove the cartridge and actually clean the print head by gently blotting the nozzles with a moist cloth or paper towel and replace it in the Publisher. See Section 5-B.

Change Cartridge

If you need to change the cartridge, it is a good idea to use the **Change Cartridge** button in the Configuration Utility. This ensures the most accurate tracking of ink levels. To change a cartridge, click the **Change Cartridge** button. The cartridge holder will move to the center of the Publisher to make it easier to install the cartridge. Lift the top cover and install the cartridge as described in Section 2 of this manual. You will be prompted to let the system know whether or not you are installing a new or used color cartridge. Once installed, click the **OK** button and the system will update your cartridge levels.

Alignment Calibration Print

The Cartridge Alignment prints a test print and then automatically scans the print to configure your printer for bidirectional printing. It is important to perform this calibration every time you change a cartridge. If you forget to perform this calibration you will be prompted to do so before your first print from the new cartridge.

Image Alignment

The Image Alignment button will allow you to nudge the image up, down, left, or right on your disc. To center the image, click the **Image Alignment** button. You will be prompted with a choice to print a test print or simply enter values to nudge the image alignment on the disc.

If you do not know the direction and distance to move the image in order to center it on your disc, you can opt to print the centering test print. Make sure the Publisher has discs and an ink cartridge installed, and it is connected and ready to receive a print job, and then click the **Yes** button. The Publisher will pick a disc and print a scale of numbers on it. You will be prompted to open the Publisher's front cover, rotate the printed disc 180 degrees, reload it into the input, and close the cover. Click **OK** when ready and the Publisher will pick the disc and print another scale of numbers. The disc should look like this:

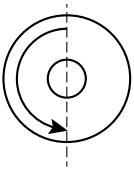

Once the print has finished, you will see the following dialog box:

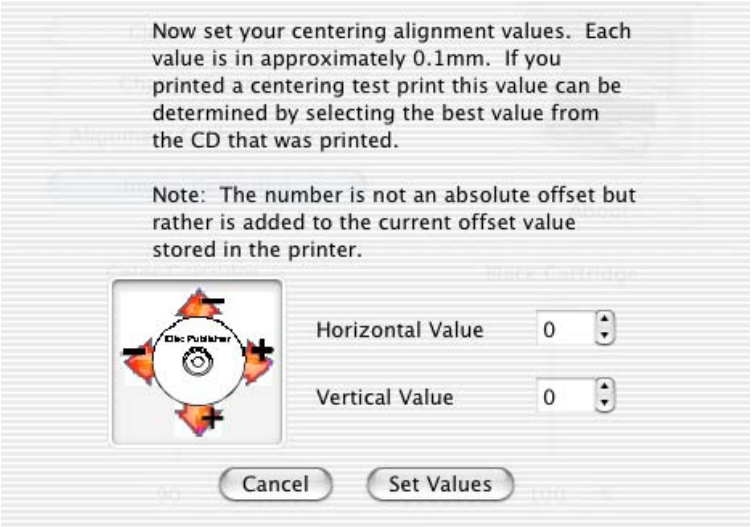

Look at the finished alignment disc and pick the numbers that come closest to lining up with one another. For instance, on the disc shown in this manual, the vertical alignment is 2 and the horizontal alignment is 0. Enter this in the alignment dialog box.

If you choose not to print the test print, you will simply see the alignment dialog box and can enter values to move the image. The unit of measure is roughly 0.1mm. Making the Horizontal Calibration number smaller or more negative will move the image slightly to the left. Making the Horizontal Calibration a larger value, or more positive will move the image to the right. If the Vertical Calibration number is made smaller, or more negative the image will move slightly up. If the Vertical Calibration is set to a larger value, or more positive value, the image will move down on the disc.

Calibrate Last Disc

Use this calibration if you frequently receive false messages that two discs were picked. When you press this button you will be prompted to place one disc in the input bin. The Publisher will then touch each disc with the robotic arm to set the correct measurement for the last disc in the bin.

Section 5: Maintenace and Troubleshooting

A. INTERPRETING THE PUBLISHER'S INDICATOR LIGHTS

The Power/Ink button can tell you what is happening inside the Publisher. Please refer to the following:

Power/Ink Button	Publisher
Fast Flashing	The Publisher is initializing.You will see this pattern when the Publisher is first turned on. Wait until the lights stop blinking before opening software or starting jobs.
Slow Flashing	The cover is open and the ink cartridge carrier is in change position. Insert a new cartridge and close the cover. (The slow flashing light can also indicate an out of media condition, a robotic error or a picking problem. However, these conditions are always paired with a error message on screen.)

B. CLEANING THE PUBLISHER

NOTE: *Do NOT attempt to oil or grease the Publisher's Robotic Arm shaft or other components. You will likely cause more harm than good! Any moving parts are designed to operate for the life of the machine with no additional lubrication required.*

Use a clean, lint-free rag with a small amount of ammonia window cleaner to clean the Publisher's outside case and trays. This type of cleaner is very effective on inks that may accumulate on the printer tray. Stronger cleaning solutions are NOT recommended because they may damage the paint and plastic materials from which the parts are manufactured. Always disconnect your Publisher's power cords before cleaning. Resume operation only after the surfaces are completely dry.

C. PERFORMING A ROBOTIC SELF-TEST

To ensure that everything is working properly, a Self-Test feature is built in to your Publisher. In this mode, the Robotic Disc Transporter will go through the motions of picking and placing a disc to ensure proper working order. This test may be performed without connecting the Publisher to the PC.

Perform the test by doing the following steps:

- Load some discs into the Input Bin.
- Open the cover.
- Press and hold the power button for five seconds. The test will start.
- To stop the test, close the cover and press the power button.

D. CLEANING THE INK CARTRIDGE

It may be necessary to clean the ink cartridge nozzles if you notice reduced print quality, or if you suspect an cartridge nozzle has become slightly dried out or clogged. If you are having print quality problems, follow the steps below:

1. Remove the print cartridge.
2. Moisten a lint-free cloth with water.
3. Hold the cloth against the nozzles for three seconds. This will “wick” some additional ink onto the damp cloth.

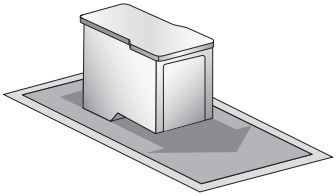

4. Wipe in one direction only.
5. Repeat the process.

E. TECHNICAL SUPPORT

If you have difficulties in operating your Publisher, the procedures in this manual and the software User's Guide should, in most cases, solve the problem. If you still have difficulty, contact the technical support number listed on the insert included in the supply pack that came with your Publisher.

Source	Location
Primera Knowledge Base	www.primera.com/knowledgebase.html
PTPublisher Software Help files	Open the software. Click on the ? icon in the upper right corner of any screen.
SureThing Software Help files	Open the software. Click on the **Help Menu - Contents**
Email Support	www.primera.com/contact_tech_support.cfm
Chat Support	www.primera.com/knowledgebase.html
Phone Support	763-475-6669 (Mon - Fri 8 a.m. - 7 p.m. CST)

Section 6: Technical Specifications

Model	Optical Disc Publisher SE
Configurations	DVD+/-R Publisher
Printing Method	Ink-Jet
Printing Resolution	4800 x 1200 dpi, 2400 x 1200 dpi, 1200 x 1200 dpi, 600 x 600 dpi
Ink Types	One 3-color (CMY) cartridge
Media Types	Ink-Jet Printable Surface CD-R, CD-RW, DVD-R, DVD RAM, DVD+R, Dual Layer DVD+R.
Maximum print width	4.724" (120mm)
Minimum PC System	Intel™ Processor III/IV 750 MHz or higher, 256MB RAM minimum, 512 MB recommended, available PCI slot, one free USB 2.0 port
Minimum MAC System	G4 PowerPC 700MHz or higher running Mac OS Version 10.2 or higher, 256MB RAM minimum, 2GB free hard disk space (6GB for DVD)
Disc Capacity	20 disc input, 20 disc output
Recordable Formats	CD-R: CD-Audio (CD-DA), CD-ROM, CD-I, Video-CD, MP3 to CD-Audio
Operating Systems	Windows XP and Windows 2000 Mac OSX Version 10.2 or higher
Interface	USB 2.0 port
Power Requirement	100-120VAC / 220-240VAC
Weight	10.4 lbs (4.71 kg)
Dimensions	6.75" H x 15" W x 15" D (14.15 cm x 38.1 cm x 38.1 cm)
EMC Certifications	FCC Class A, CE
Safety	UL, UL-C, CE, RoHS
Warranty	One year return-to-depot

TOC

Index

Align Cartridge 13, 25, 41
Cartridge, Change 27, 41
CD Tray 6
Centering Test Print.....26, 42
Color Matching.....24, 38
Connections, Rear Panel 4
Current Projects Panel.....19
Identifying the Parts.....3
Ink Levels and Cartridge Maintenance 27
Ink Saturation.....25
Input Bin.....4
Inner Diameter 25, 39
New Project Panel 19
Open Project Panel 19
Output Bin.....4
Overview of Operation.....6
Paper Size 24
Power/Ink Button 4
Power Input.....5
Resolution 16, 47
Robot Status Panel 20
Specifications.....47
Status Bar.....20
System Requirements 5
Technical Support 46

Printed in the United States of America
P/N 510963